TTX25 FSAE 200/57

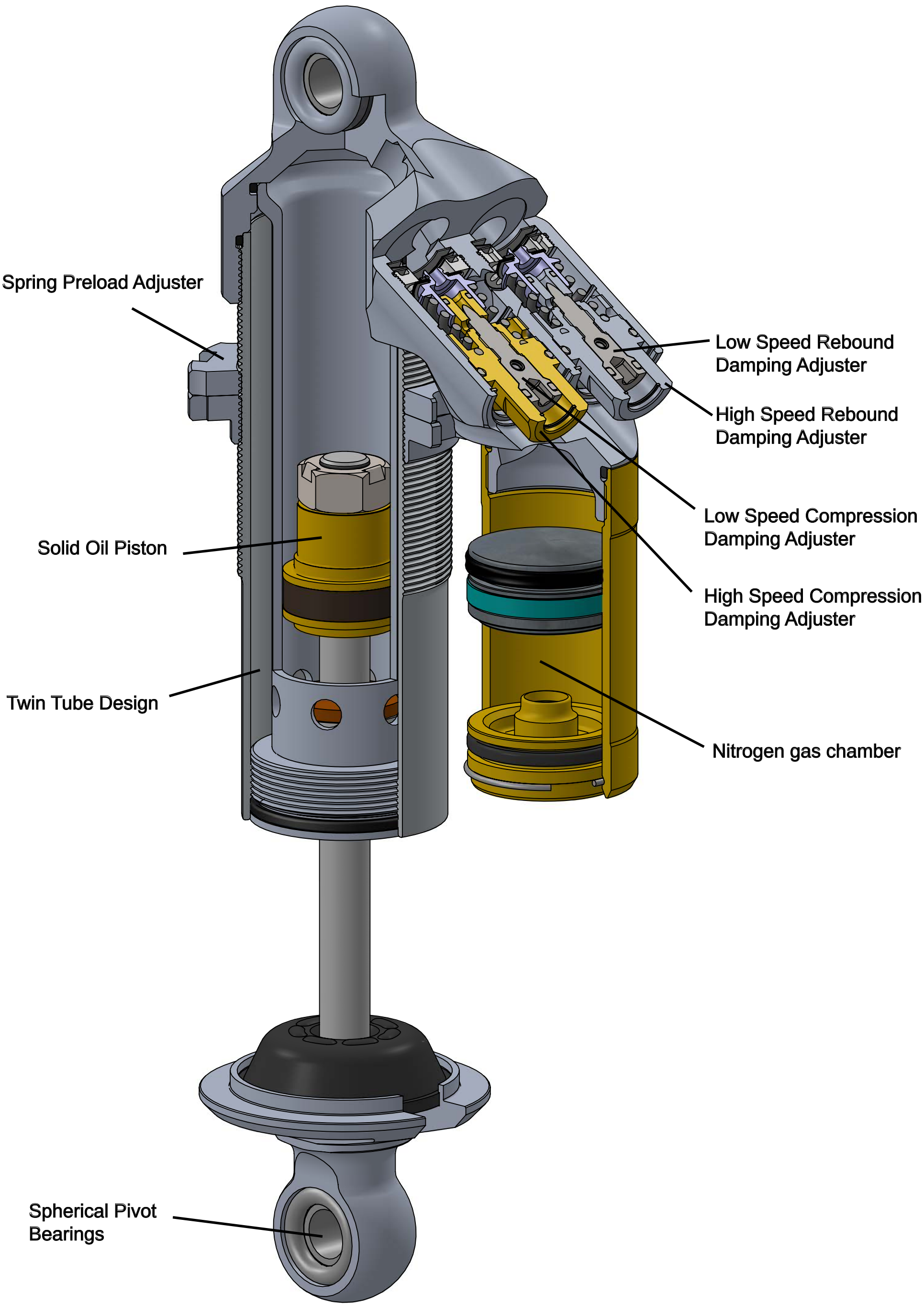

CANE CREEK